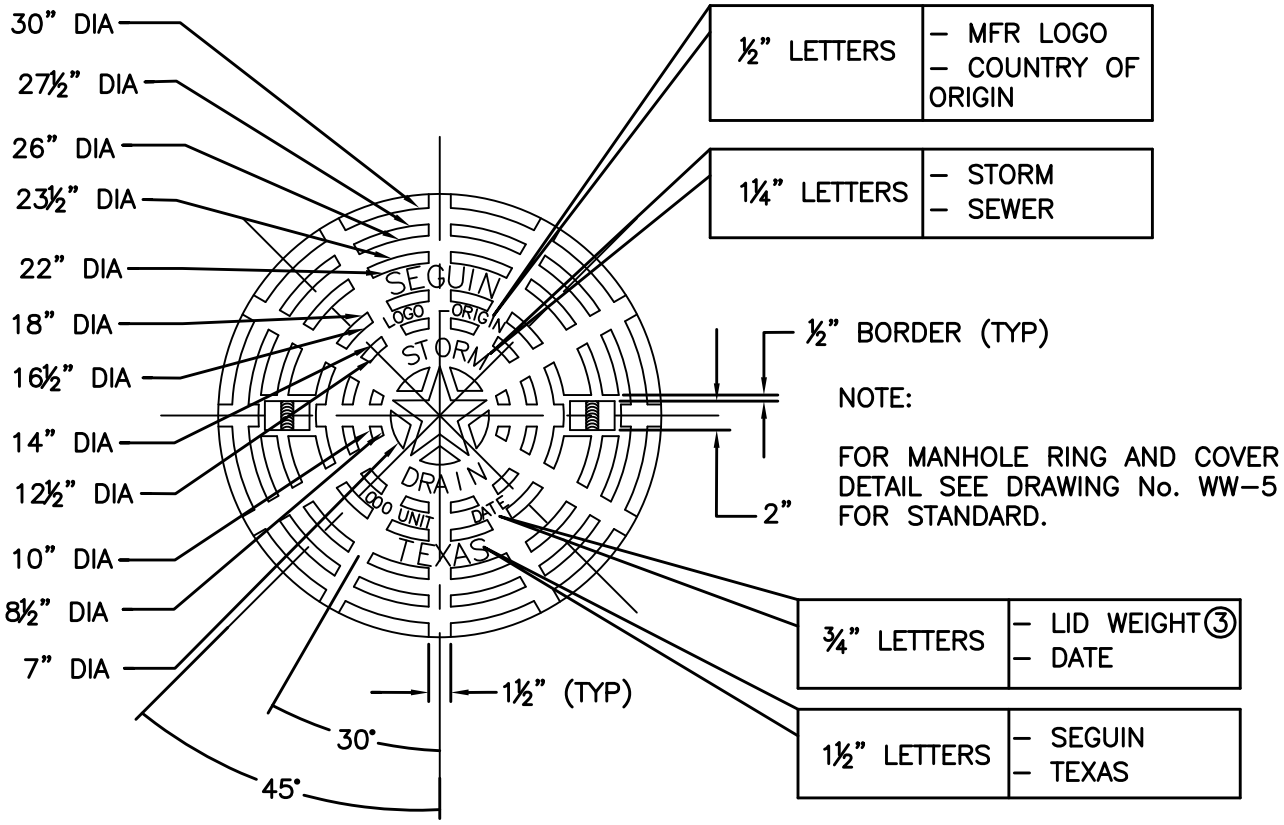

LID PLAN VIEW

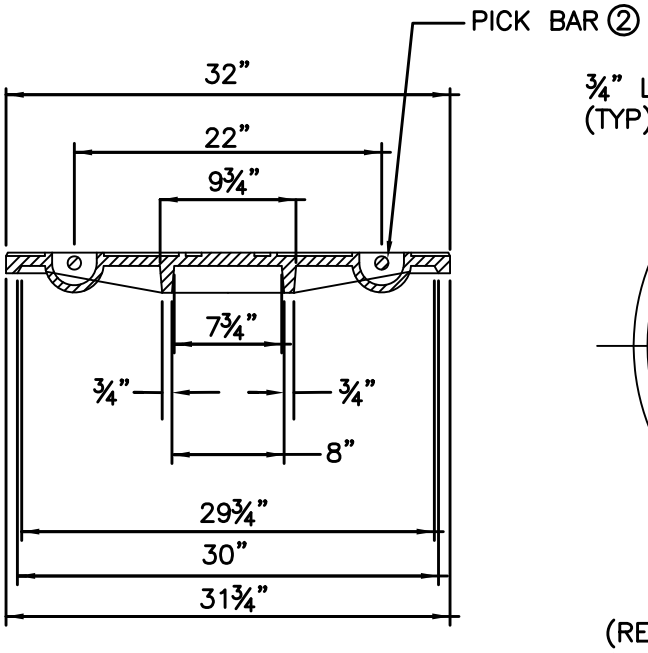

LID SECTION VIEW

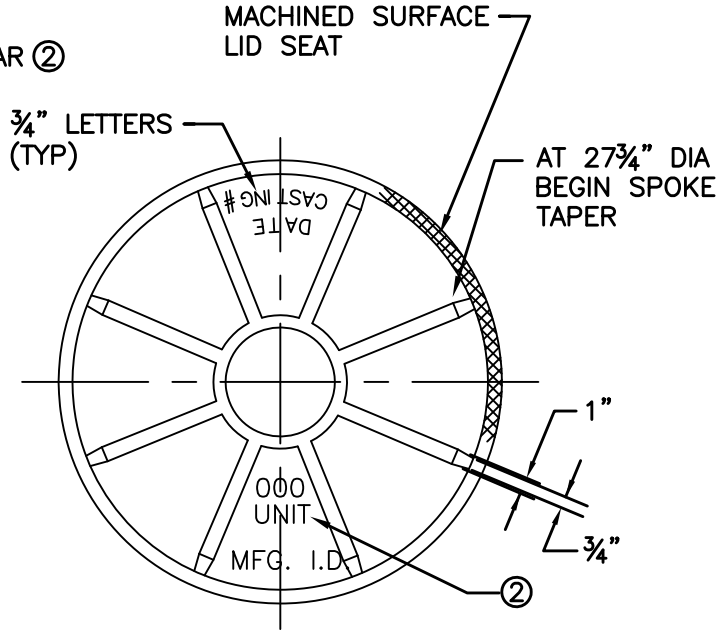

(RELIEVE SPOKE ENDS ⅛" BEYOND LID FOR SEAT MACHINING PURPOSES)

LID SECTION VIEW

THE CITY OF
SEGUIN

DATE ISSUED:	JUNE 1, 2013	
REV	DATE	BY

TITLE

STORM SEWER MANHOLE RING AND COVER
SHEET 1 OF 3

SCALE:	DRAWING No.
N.T.S.	STM–4