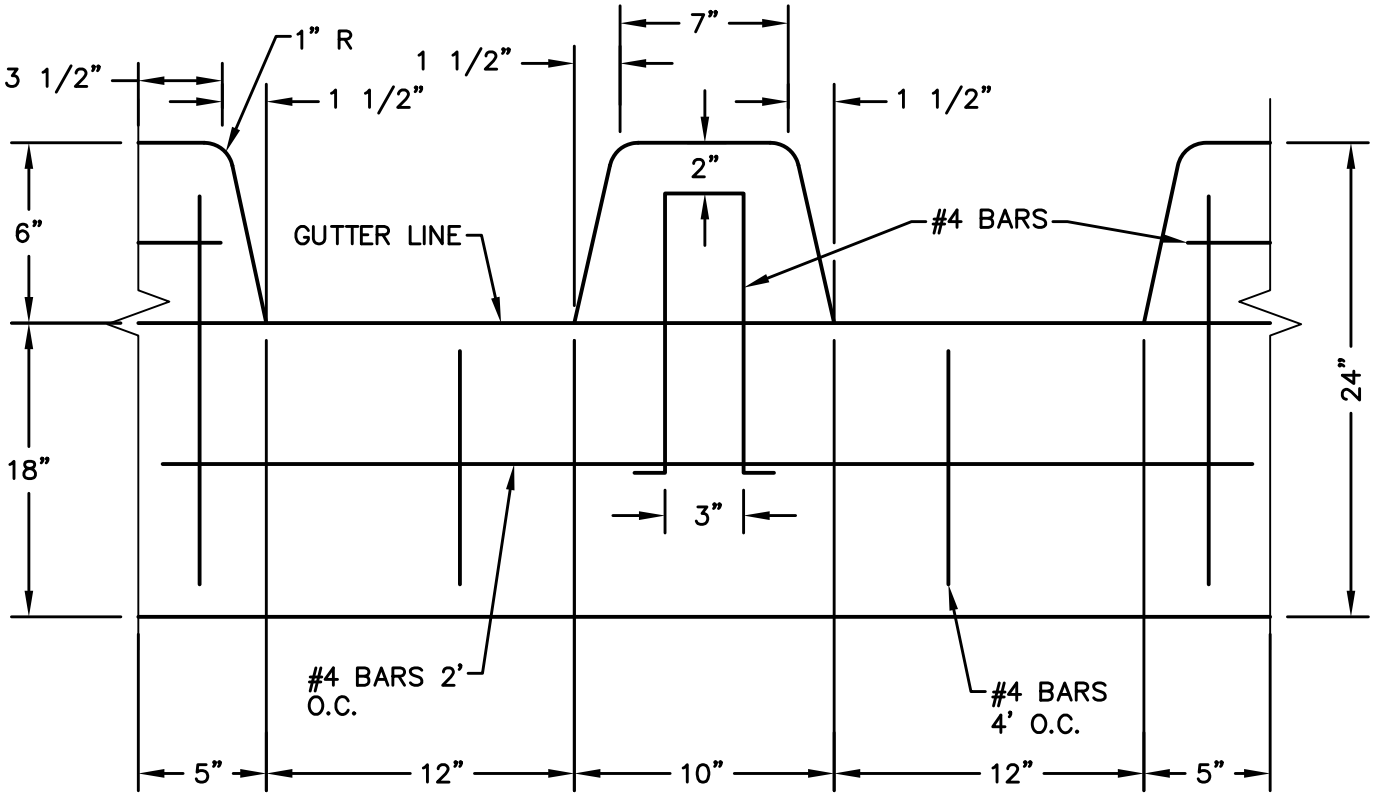

SAW TOOTH CURB DETAIL

THE CITY OF SEGUIN

DATE ISSUED:	JUNE 1, 2013	
REV	DATE	BY

TITLE

SAW TOOTH CURB

SCALE: N.T.S.

DRAWING No. CRB–6