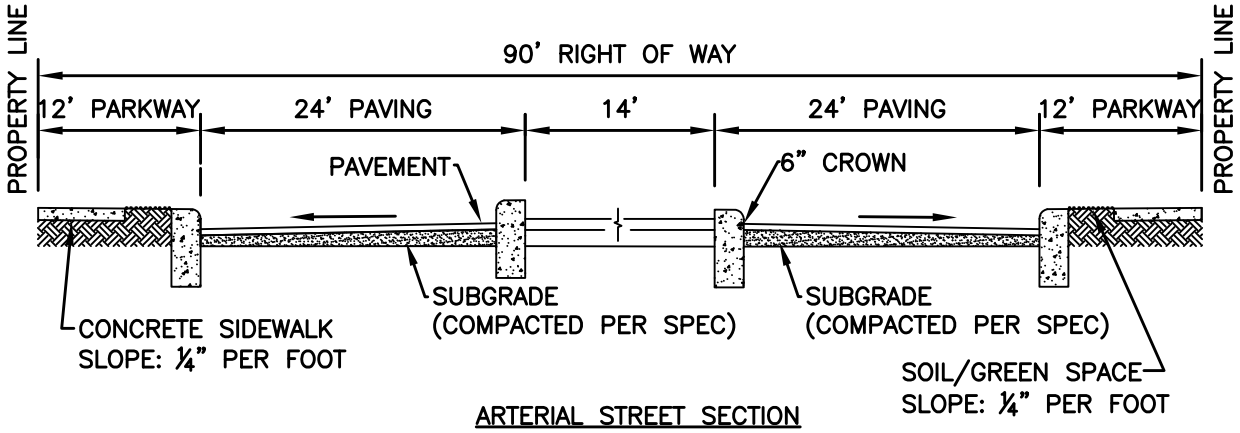

ARTERIAL STREET SECTION

THE CITY OF
SEGUIN

DATE ISSUED:	JUNE 1, 2013	
REV	DATE	BY

TITLE

TYPICAL ARTERIAL STREET SECTION

SCALE:	DRAWING No.
N.T.S.	RDWY–2