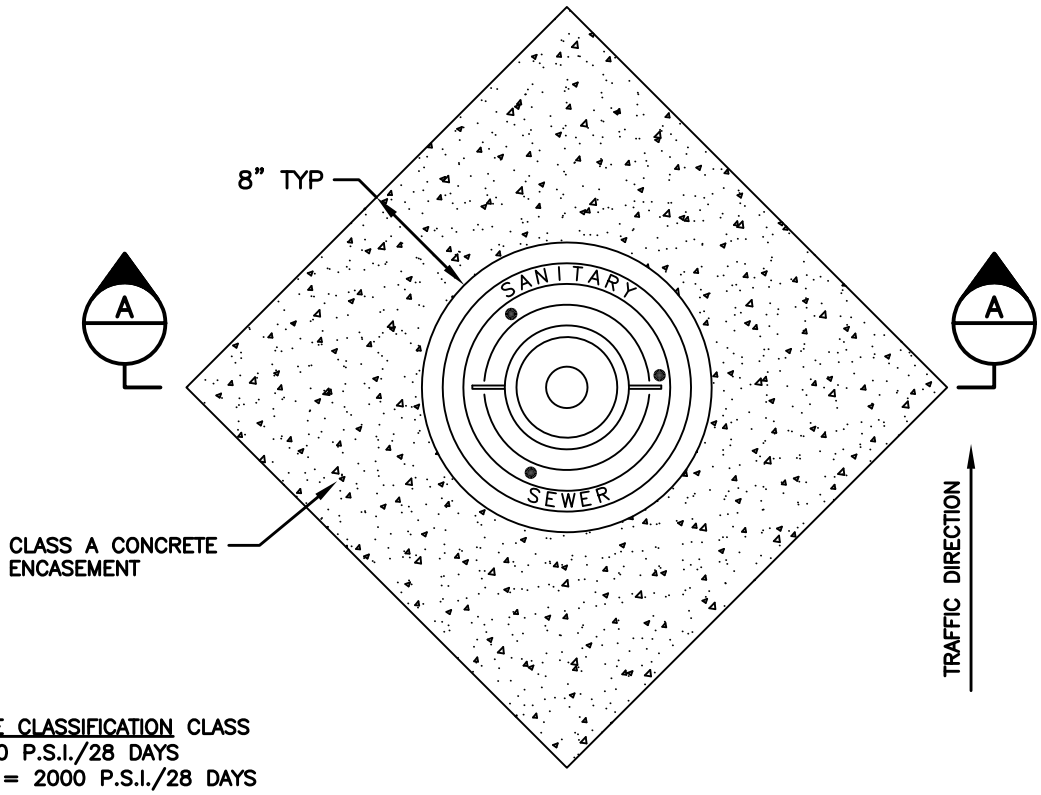

CONCRETE CLASSIFICATION CLASS
A = 3000 P.S.I./28 DAYS
CLASS B = 2000 P.S.I./28 DAYS

MANHOLE RING ENCASEMENT PLAN

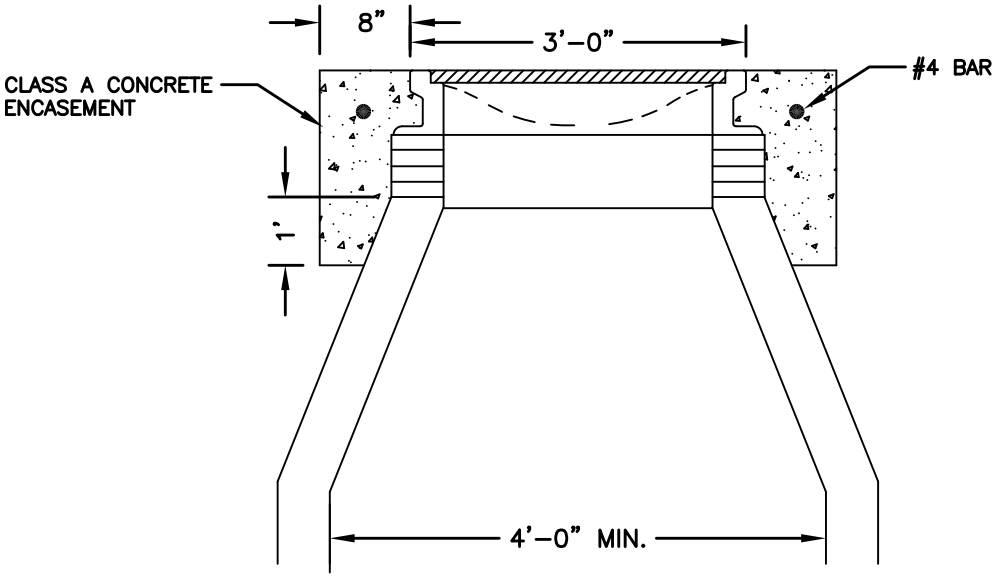

SECTION A–A

MANHOLE RING ENCASEMENT DETAIL

THE CITY OF
SEGUIN

DATE ISSUED:	JUNE 1, 2013	
REV	DATE	BY

TITLE
MANHOLE RING ENCASEMENT DETAIL

SCALE: N.T.S.

DRAWING No. WW–6