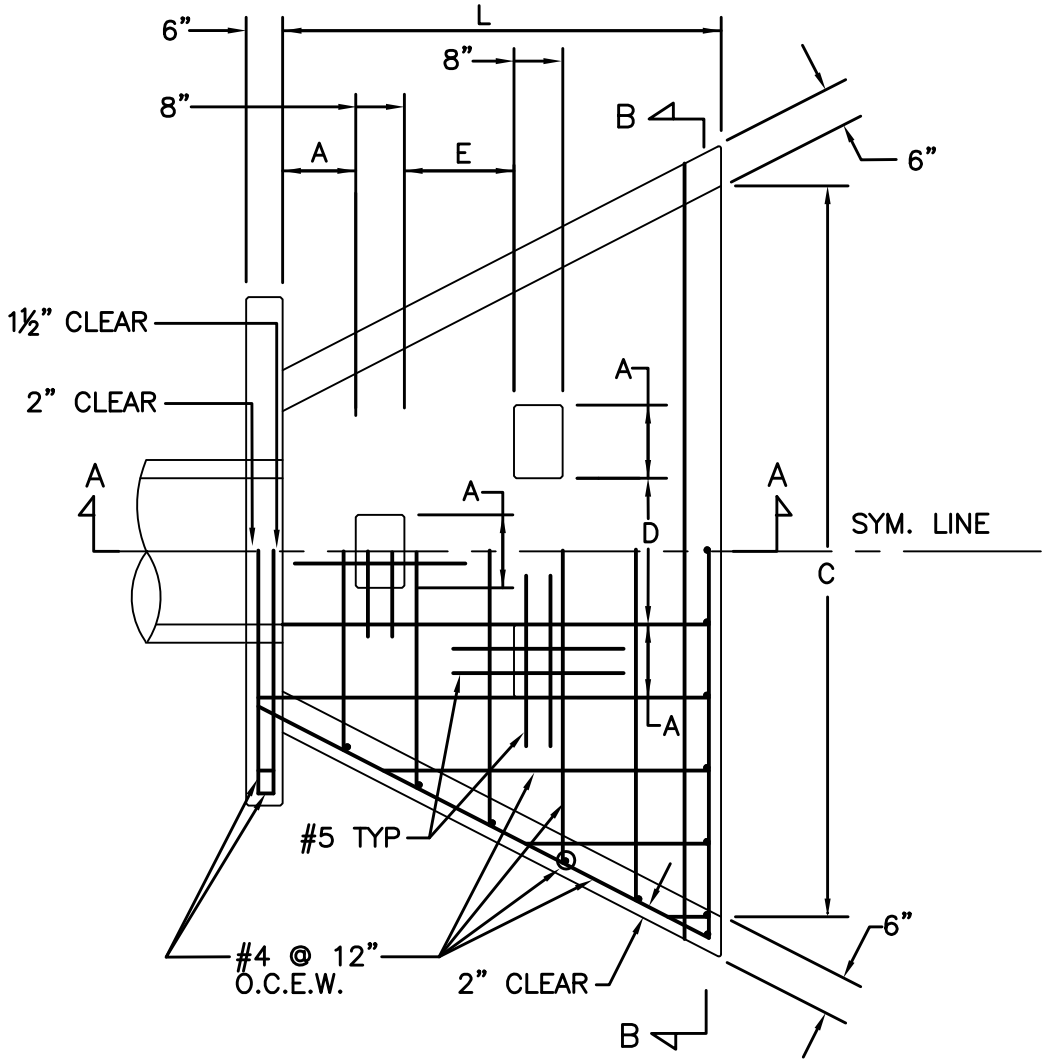

PLAN

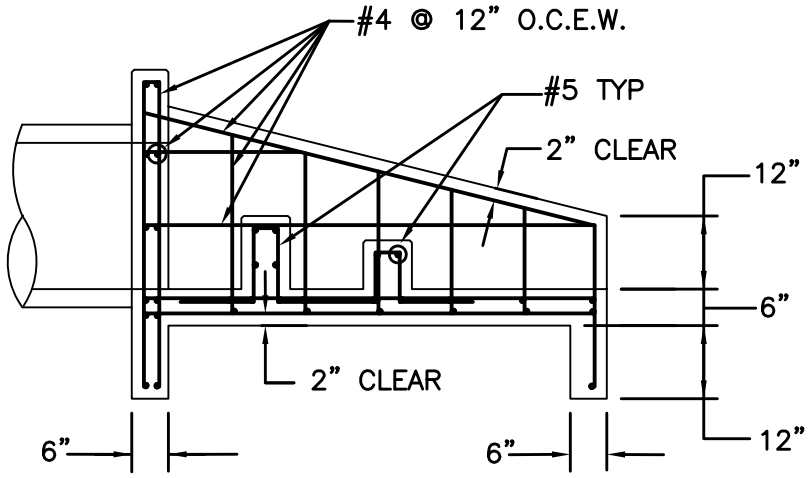

SECTION A–A

THE CITY OF
SEGUIN

DATE ISSUED:	JUNE 1, 2013	
REV	DATE	BY

TITLE

STANDARD HEADWALL AND ENERGY DISSIPATORS
SHEET 1 OF 2

SCALE: N.T.S.

DRAWING No. STM–7