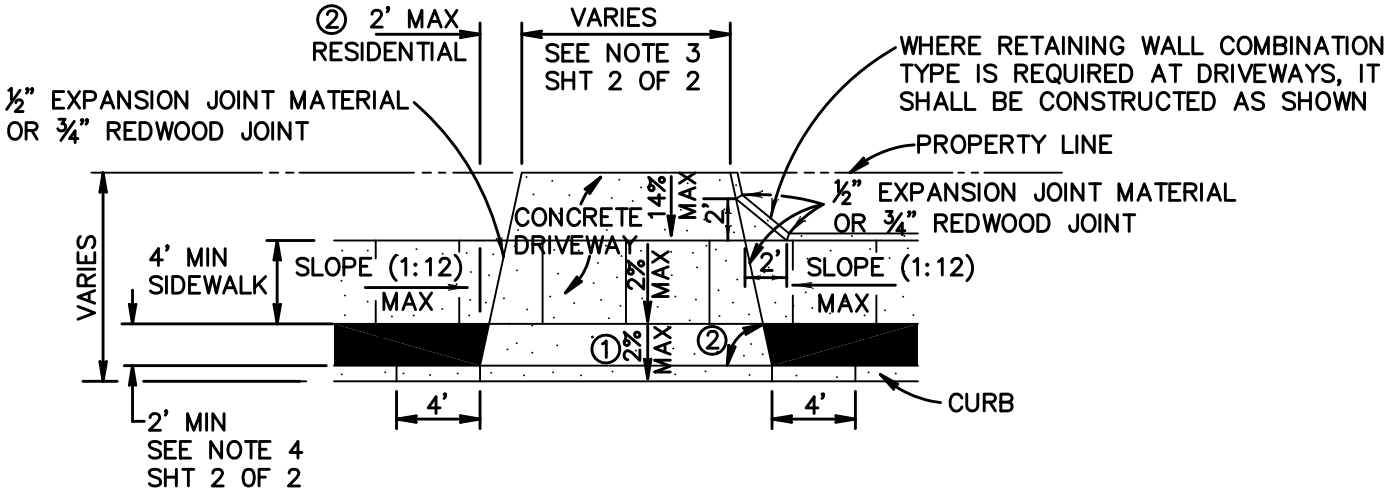

① 8% MAX TO THE EDGE OF THE SIDEWALK IF SIDEWALK SEPARATION IS 4' OR GREATER.

② 45° FOR COMMERCIAL DRIVEWAY

TYPICAL DRIVEWAY PLAN VIEW

WITH SIDEWALK SEPARATED FROM CURB

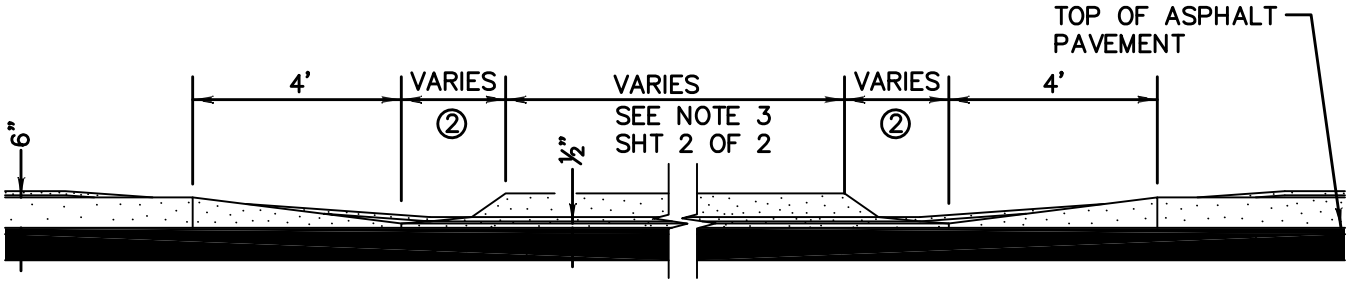

② RESIDENTIAL: 2' MAXIMUM;
COMMERCIAL: SEE PLAN VIEW

CURB PROFILE AT DRIVEWAY

WITH SIDEWALK SEPARATED FROM CURB

THE CITY OF
SEGUIN

DATE ISSUED:	JUNE 1, 2013	
REV	DATE	BY

TITLE

TYPICAL DRIVEWAY PLAN AND CURB PROFILE AT DRIVEWAY
SHEET 1 OF 2

SCALE: N.T.S.

DRAWING No. DRWY–6