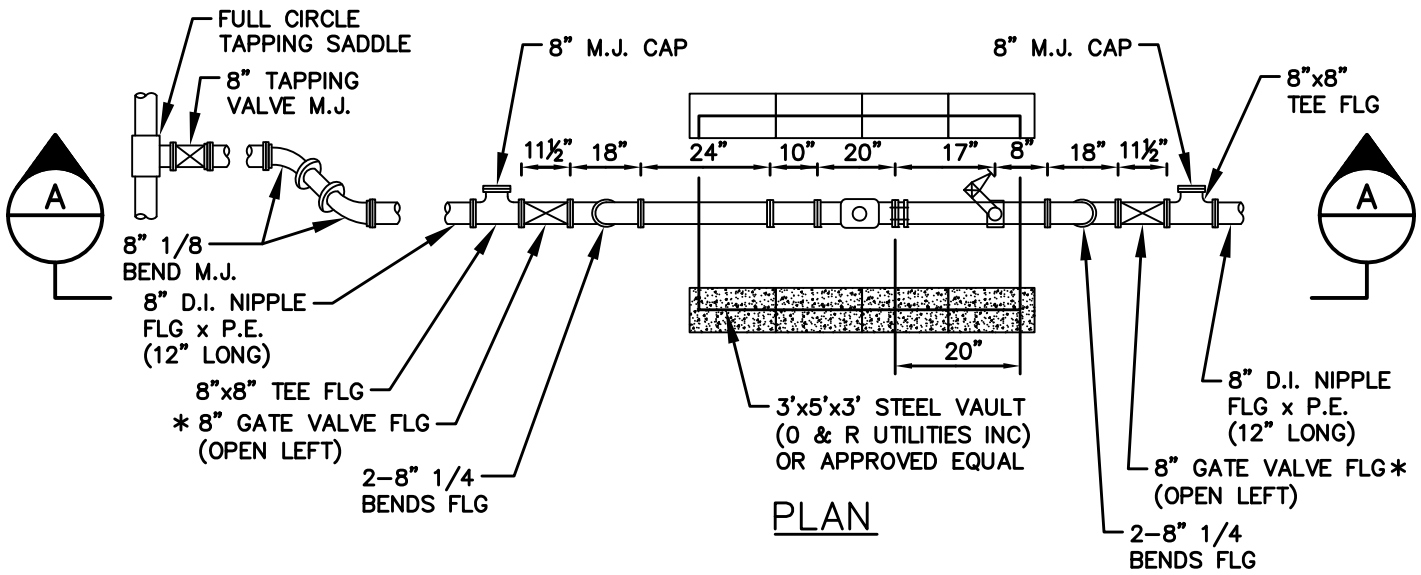

PLAN

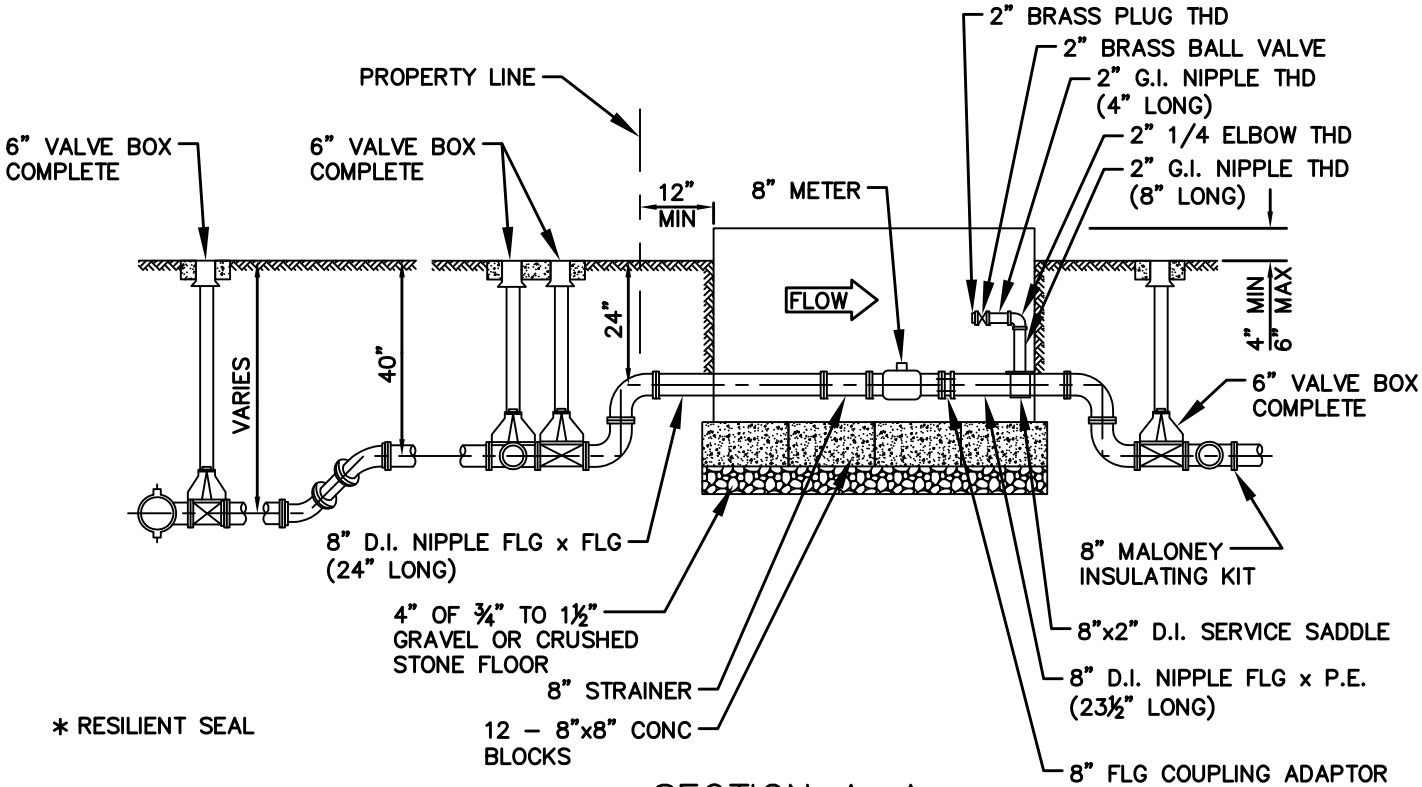

SECTION A-A

NOTE:

1. CONNECTION TO THE WATER MAIN LINE SHALL BE MADE WITH A FULL CIRCLE TAPPING SADDLE.

THE CITY OF SEGUIN

DATE ISSUED:	JUNE 1, 2013	
REV	DATE	BY

TITLE

8" METER INSTALLATION
NON-TRAFFIC BEARING LOCATION

SCALE: N.T.S.

DRAWING No. WTR-10