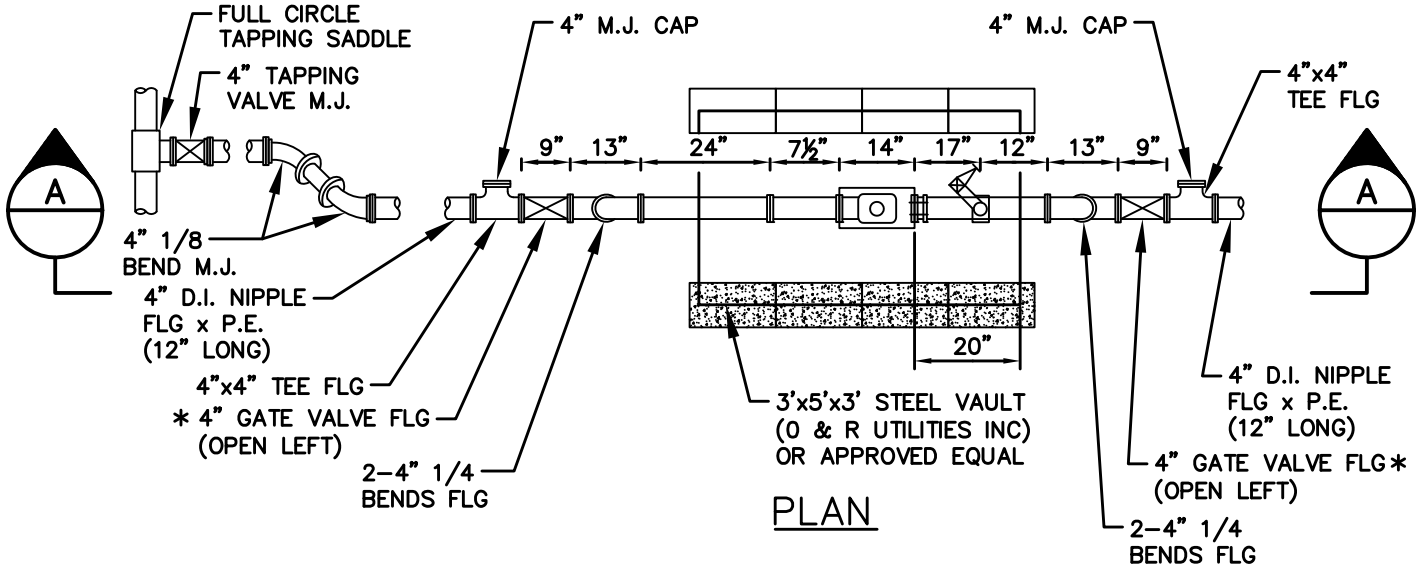

PLAN

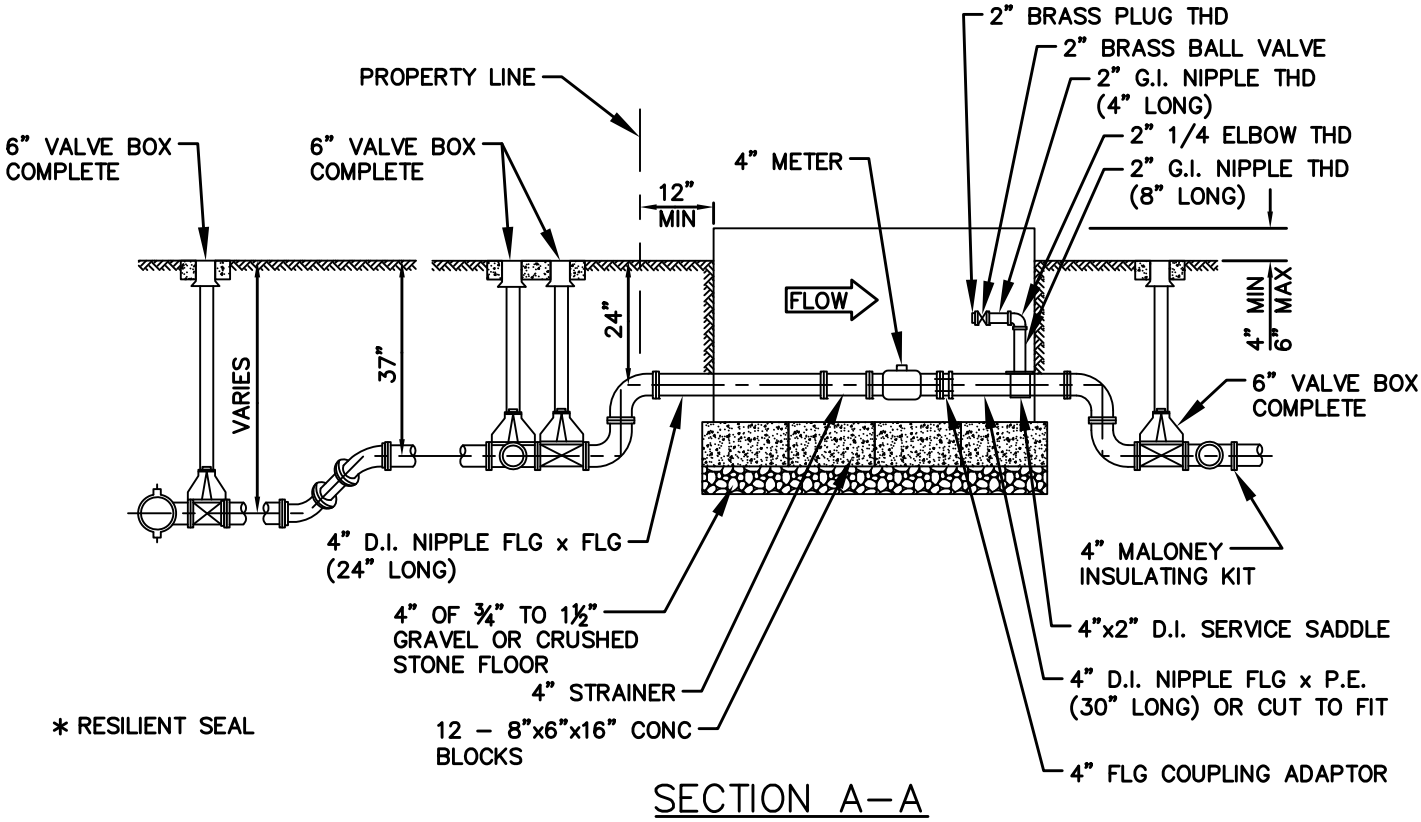

SECTION A-A

NOTE:

1. CONNECTION TO THE WATER MAIN LINE SHALL BE MADE WITH A FULL CIRCLE TAPPING SADDLE.

THE CITY OF
SEGUIN

DATE ISSUED:	JUNE 1, 2013	
REV	DATE	BY

TITLE

4" METER INSTALLATION
NON-TRAFFIC BEARING LOCATION

SCALE:	DRAWING No.
N.T.S.	WTR-8